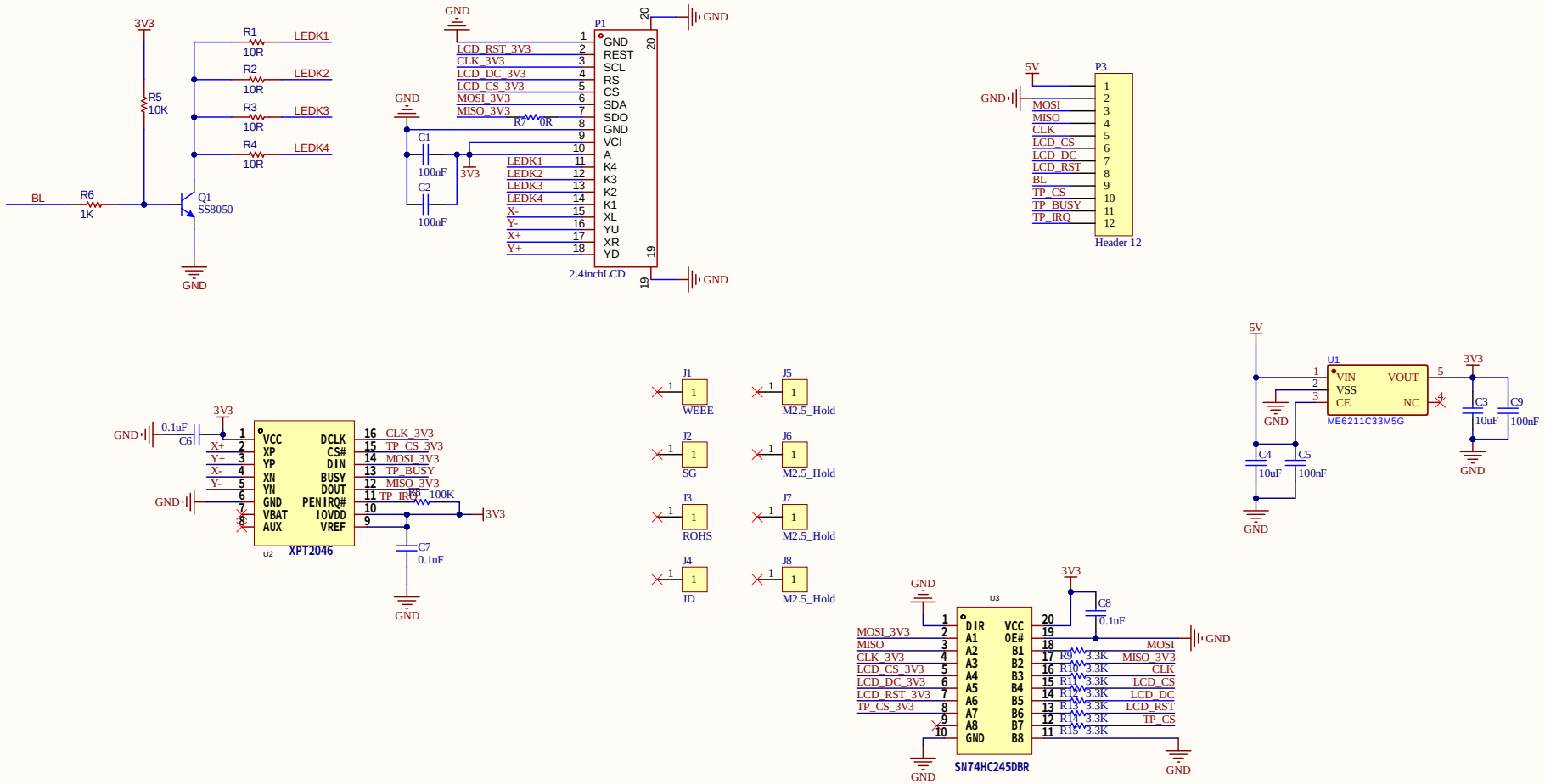
3V3
R1
10R
LEDK1
R2
10R
LEDK2
R3
10R
LEDK3
R4
10R
LEDK4
R5
10K
BL
R6
1K
Q1
SS8050
GND
P1
GND
REST
SCL
RS
CS
SDA
SDO
GND
VCI
A
K4
K3
K2
K1
XL
YU
XR
YD
LCD_RST_3V3
CLK_3V3
LCD_DC_3V3
LCD_CS_3V3
MOSI_3V3
MISO_3V3
R7
0R
C1
100nF
C2
100nF
LEDK1
LEDK2
LEDK3
LEDK4
X-
Y-
X+
Y+
2.4inchLCD
5V
P3
MOSI
MISO
CLK
LCD_CS
LCD_DC
LCD_RST
BL
TP_CS
TP_BUSY
TP_IRQ
Header 12
0.1uF
C6
VCC
XP
YP
XN
YN
GND
VBAT
AUX
DCLK
CS#
DIN
BUSY
DOUT
PENIRQ#
IOVDD
VREF
CLK_3V3
TP_CS_3V3
MOSI_3V3
TP_BUSY
MISO_3V3
TP_IRQ
R8
100K
C7
0.1uF
XPT2046
U2
J1
WEEE
J2
SG
J3
ROHS
J4
JD
J5
M2.5_Hold
J6
M2.5_Hold
J7
M2.5_Hold
J8
M2.5_Hold
U1
VIN
VSS
CE
VOUT
NC
ME6211C33M5G
C3
10uF
C9
100nF
C4
10uF
C5
100nF
U3
DIR
A1
A2
A3
A4
A5
A6
A7
A8
GND
VCC
OE#
B1
B2
B3
B4
B5
B6
B7
B8
C8
0.1uF
R9
R10
R11
R12
R13
R14
R15
3.3K
MOSI
MISO_3V3
CLK
LCD_CS
LCD_DC
LCD_RST
TP_CS
SN74HC245DBR